XHD LITHIUM CORDLESS HEAVY DUTY IMPACT DRIVER BRUSHLESS 18V - BARE TOOL



XHD20

OPERATORS MANUAL

TABLE OF CONTENTS

Specifications ***3***
Product Identification ***3***
Safety Guidelines ***4***
Operation ***8***
Fastening Torque Guide ***13***
Maintenance ***14***

Note

This manual is for your reference only. Due to the continuous improvement of the XHD Lithium products, changes may be made at any time without obligation or notice.

Thank You

For the purchase of this XHD Lithium product. We try our hardest to supply customers like you with the best quality products available, at the best price possible. We cant wait to continue working together in the future.

SPECIFICATIONS

No Load Speed	2600RPM
No Load Impact Rate	3400BPM
Torque	100 | 150 | 220 Nm

PRODUCT IDENTIFICATION



1 Bit Sleeve
2 Reverse Switch Lever
3 On/Off Trigger
4 Rubberised Ergonomic Handle
5 Control Buttons
6 LED Work Light
7 Hook Installation Groove
8 XHD Battery (Not Included)

SAFETY GUIDELINES

⚠ WARNING

READ ALL SAFETY WARNINGS & INSTRUCTIONS. Failure to follow instructions and warnings could lead to serious injury, electric shock, or fire.

Work Area Safety

- **Ensure that your work area is kept clean and well lit.** Lack of visibility and clutter greatly increase the risk of accident when using tools.
- **Keep bystanders, pets, and children clear when operating this power tool or machine.** They can cause distraction or risk injury to themselves.
- **Ensure you are not operating the power tool or machinery in the presence of dust, liquids, flammable gases, or anything that can create an explosive atmosphere.** Power tools and machinery can create sparks which can lead to ignition and fire hazards in working environments.

Personal Safety

- **Always wear personal protective equipment (PPE).** Eye protection, ear protection, dust masks, and other protective equipment will help to reduce the risk of personal injury or long-term illnesses.
- **Dress appropriately. DO NOT wear loose clothing that can get caught in moving parts.** Keep hair, loose clothing, jewellery, and anything else that could be of risk, away from moving parts in the machine, or they could become caught therein.
- **Always remain alert and DO NOT operate power tools or machinery under the influence of any substances such as alcohol or drugs, including prescription medications.** Lack of focus could lead to injury or accidents while operating these power tools and machinery.
- **Always ensure proper footing and balance.** Overreaching can lead to slipping and falling which can result in injury or accident.
- **Ensure the power switch is in the OFF position before connecting any battery, or power source to the power tool or machinery.** This can cause injury as tools and machinery can suddenly fire incidentally when live, causing accidents.
- **Use all provided dust collection and extraction attachments, if included.** This equipment, along with the use of PPE dust masks, can help keep you safe from dust inhalation, and keep your work site clear from hazards.
- **Ensure loose parts such as wrenches or adjusting keys are removed before starting the power tool or machinery.**

SAFETY GUIDELINES

Power Tool & Machinery Use & Care

- **Use the correct tool for the job.** Forcing a tool to do a job it was not designed for increases the risk of accident or injury.
- **Disconnect tools and machinery from power, or remove batteries before doing any maintenance or adjustments, or before storing the tools and machinery.** This reduces or removes the risk of a power connection that causes the tool or machinery to accidentally fire, which can help prevent injury or accident.
- **Check the general condition of the power tool for damage or any problems that could affect the way the tool or machine works.** An unrepaired tool or machine can lead to accident and injury. Only have your tool or machine repaired with genuine parts from your local distributor
- **Only use the power tool and machinery with genuine parts or accessories that are designed to be used with this power tool and machinery.** Failure to do so could result in accident or injury, or damage your tool or machinery.
- **Store your tool or machinery out of reach of children, and away from untrained personnel when not in use.** Use by somebody untrained, or a child, could lead to accident or serious injury.

Service

- **Have your tools and machinery serviced by your local distributor with genuine XHD Lithium replacement parts.** This will ensure that the safety of the power tool or machine is maintained.

⚠ WARNING

The warnings and precautions discussed in this manual cannot cover all possible conditions and situations that may occur. It must be understood by the operator that common sense and caution are factors which cannot be built into this product, but must be supplied by the operator.

Always Use Common Sense

- It is not possible to cover every conceivable situation you can face. Always exercise care and use your common sense. If you get into a situation where you feel unsafe, stop and seek expert advise. Contact your dealer, service agent, or an experienced user. Do not attempt any task you feel unsure of!
- **Do not let familiarity gained from the frequent use of tools allow you to become complacent and ignore tool safety principles.** A careless action can cause severe injury within a fraction of a second.

SAFETY GUIDELINES

Battery Tool Use & Care

- Prevent unintentional starting. Ensure the switch is in the OFF position before connecting to the battery pack, picking up, or carrying the machine. Carrying the machine with your finger on the switch or energising a machine that has the switch ON invites accidents.
- Disconnect the battery pack from the machine before making any adjustments, changing accessories, or storing the machine. Such preventive safety measures reduce the risk of starting the machine accidentally.
- Recharge the battery only with the charger specified by the manufacturer. A charger that is suitable for one type of battery pack may create a risk of fire when used with another battery pack.
- Use machines only with specific battery packs. Use of any other battery packs may create a risk of injury and fire.
- When the battery pack is not in use, keep it away from other metal objects, like paper clips, coins, keys, nails, screws, or small metal objects, that can make a connection from one terminal to another. Shorting the battery terminals together may cause burns or a fire.
- Under abusive conditions, liquid may be ejected from the battery; avoid contact. If contact accidentally occurs, flush the area with water. If liquid contacts eyes, seek medical help. Liquid ejected from the battery may be acidic and may cause irritation or burns.
- Do not use a battery pack or machine that is damaged or modified. Damaged or modified batteries may exhibit unpredictable behaviour resulting in fire, explosion, or risk of injury.
- Do not expose a battery pack or machine to fire or excessive temperature. Exposure to fire or temperature above 130°C may cause explosion.
- Follow all charging instructions and do not charge the battery pack or machine outside of the temperature range specified in the instructions.
- Charging the battery improperly, or at temperatures outside of the specified range may damage the battery and increase the risk of fire.
- Have servicing performed by a local XHD distributor using only identical replacement parts. This will ensure that the safety of the product is maintained.
- Do not modify or attempt to repair the machine or the battery pack except as indicated in the instructions for use and care.

Battery Long Life Tips

- Charge the battery cartridge before it is completely discharged. Always stop tool operation and charge the battery cartridge when you notice less tool power.
- Never recharge a fully charged battery cartridge. Overcharging shortens the battery service life.
- Charge the battery cartridge with room temperature at 10°C – 40°C. Allow a hot battery to cool before charging it.
- Charge the battery cartridge once in every six months if you do not use it for extended periods at a time.

SAFETY GUIDELINES

Impact Driver Specific Safety

- Hold the power tool by its insulated gripping surfaces, when performing an operation where the fastener/cutting accessory may contact hidden wiring. Contacting a “live” wire may make exposed metal parts of the power tool “live” and could give the operator an electric shock.
- Always be sure you have firm footing. Be sure no one is below when using the tool in high locations.
- Hold the tool firmly.
- Wear ear protectors when impact drilling. Exposure to noise can cause hearing loss.
- Do not touch the bit or the workpiece immediately after operation. They may be extremely hot and could burn your skin.
- Keep hands away from rotating parts.
- Use auxiliary handle(s), if supplied with the tool. Loss of control can cause personal injury.
- Never operate at higher speed than the maximum speed rating of the drill bit. At higher speeds, the bit is likely to bend if allowed to rotate freely without contacting the workpiece, resulting in personal injury.
- Always start drilling at low speed and with the bit tip in contact with the workpiece. At higher speeds, the bit is likely to bend if allowed to rotate freely without contacting the workpiece, resulting in personal injury.
- Apply pressure only in direct line with the bit and do not apply excessive pressure. Bits can bend causing breakage or loss of control, resulting in personal injury.

⚠ WARNING

Some dust created by power sanding, sawing, grinding, drilling, and other construction activities contains chemicals known to cause cancer, birth defects or other reproductive harm. Some examples of these chemicals are:

- ***Lead from lead-based paint,***
- ***Crystalline silica from bricks, cement, and other masonry products, and,***
- ***Arsenic and chromium from chemically-treated lumber.***

Your risk from these exposures varies, depending on how often you do this type of work. To reduce your exposure to these chemicals: work in a well ventilated area, and work with approved safety equipment, such as dust masks that are specially designed to filter out microscopic particles.

OPERATION

⚠ WARNING

Always be sure that the tool is switched off and the battery cartridge is removed before adjusting or checking the tool.

Installing or Removing the Battery

- To remove the battery cartridge, slide it from the tool while depressing the button on the front of the cartridge.
- To install the battery cartridge, align the tongue on the battery cartridge with the groove in the housing and slip it into place. Insert it all the way until it locks in place with a little click. If you can see the red indicator on the upper side of the button, that means it is not locked completely.

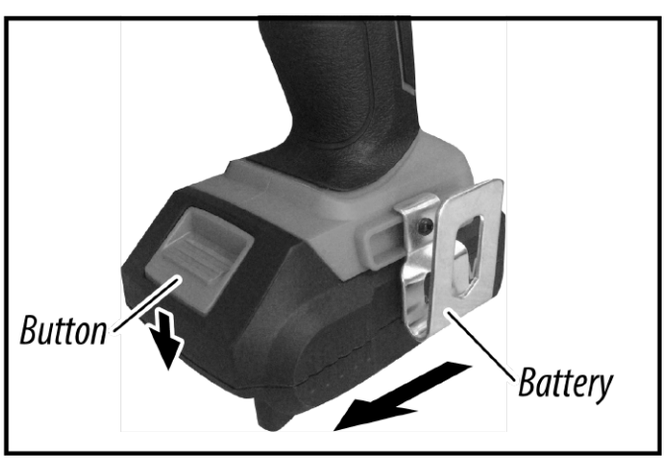

⚠ CAUTION

Do not install the battery cartridge forcibly. If the cartridge does not slide in easily, it is not being inserted correctly.

Indicating the Remaining Battery Capacity

- Press the check button on the battery cartridge to indicate the remaining capacity.

NOTE: Depending on the conditions of use and the ambient temperature, the indication may differ slightly from the actual capacity.

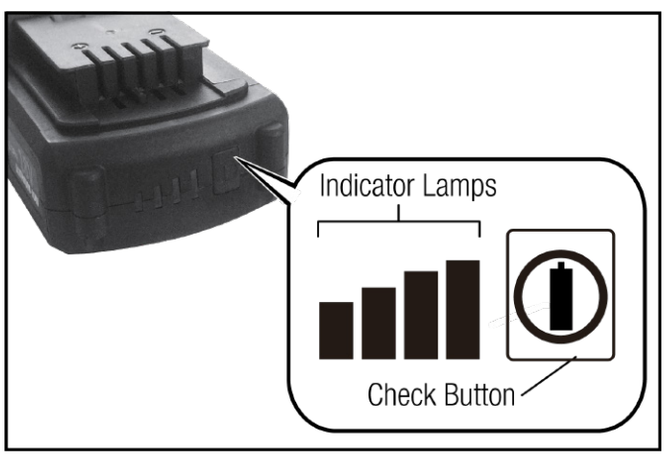

INDICATOR LAMPS			REMAINING CAPACITY
LIGHTED	OFF	BLINKING	
■	■	■	75% to 100%
■	■	□	50% to 75%
■	□	□	25% to 50%
■	□	□	0% to 25%
◪	□	□	Charge the Battery.
■ ■ ↑ ↓ □ □	□	■	The Battery may have Malfunctioned

OPERATION

Tool/Battery Protection System

- The tool is equipped with a tool/battery protection system. This system automatically cuts off power to the motor to extend tool and battery life. The tool will automatically stop during operation if the tool or battery is placed under one of the following conditions:

Overload Protection

- When the tool/battery is operated in a manner that causes it to draw an abnormally high current, the tool automatically stops without any indication. In this situation, turn the tool off and stop the application that caused the tool to become overloaded. Then turn the tool on to restart.

Overheat Protection

- When the tool/battery is overheated, the tool stops automatically. In this situation, let the tool/battery cool before turning the tool on again.

Over Discharge Protection

- When the battery capacity is not enough, the tool stops automatically. In this case, remove the battery from the tool and charge the battery.

⚠ CAUTION

Before installing the battery cartridge into the tool, always check to see that the switch trigger actuates properly and returns to the "OFF" position when released.

Switch Action

- To start the tool, simply pull the switch trigger. Tool speed is increased by increasing pressure on the switch trigger. Release the switch trigger to stop.

NOTE: The tool automatically stops if you keep pulling the switch trigger after about 6 minutes.

NOTE: While pulling the switch trigger, any other buttons will not work.



Electric Brake

- This tool is equipped with an electric brake. If the tool consistently fails to quickly stop after the switch trigger is released, bring the tool to be serviced at your local XHD dealer.

OPERATION

Illuminating the Work Light

CAUTION

Do not look in the light or view the source of light directly.

- Pull the switch trigger to turn on the lamp. To turn off, release it. The lamp goes out approximately 10 seconds after releasing the switch trigger.

NOTE: When the tool is overheated, the light flashes for one minute, and then the LED display goes off. In this case, cool down the tool before operating again.

NOTE: When the lamp lights up by pulling the switch trigger, the lamp status is ON. When the lamp does not come on, the lamp status is OFF.

NOTE: Use a dry cloth to wipe the dirt off the lens of the lamp. Be careful not to scratch the lens of the lamp, or it may lower the illumination.

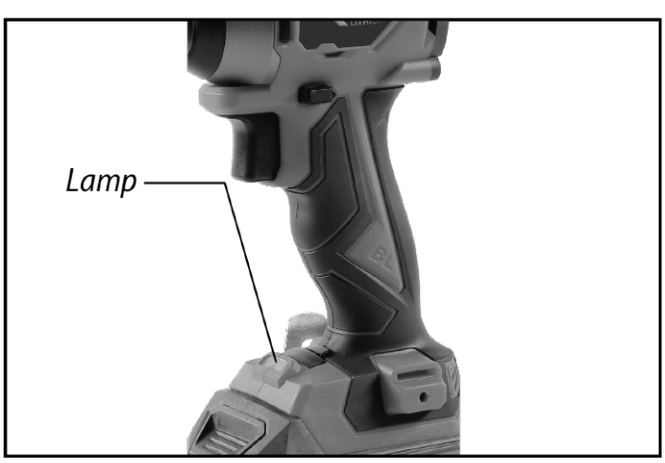

Reverse Switch Action

CAUTION

Always check the direction of rotation before operation.

Use the reversing switch only after the tool comes to a complete stop. Changing the direction of rotation before the tool stops may damage the tool.

When not operating the tool, always set the reversing switch lever to the neutral position.

- This tool has a reversing switch to change the direction of rotation. Depress the reversing switch lever from the “A” side for clockwise rotation, or from the “B” side for counter -clockwise rotation.
- When the reversing switch lever is in the neutral position, the switch trigger cannot be pulled.

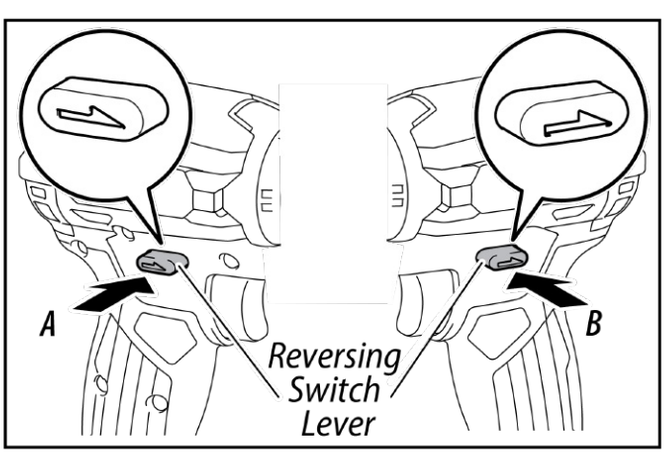

OPERATION

Changing the Work Mode

- To change the torque, press the “Mode” button. The light below the “1”, “2”, “3”, “4” icons will turn green. The “1”, “2”, “3”, “4” icons indicate different torque settings.
- To change to working mode, press the “Scenes” button, the indicator light will turn red. Each different indicator represents a different working mode: wood, thin iron, and heavy iron.
- To activate the auto stop function, first switch the machine to reverse rotation. Then, press the “Scenes” button until the indicator above the “A” turns red.

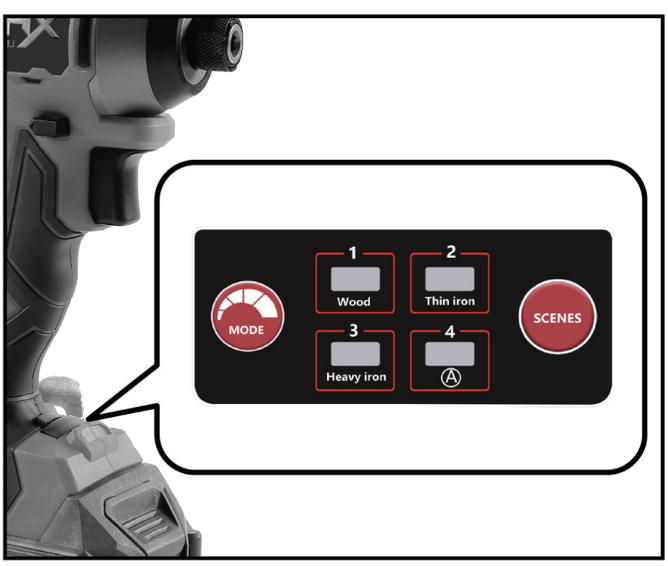

Installing/Removing Bits

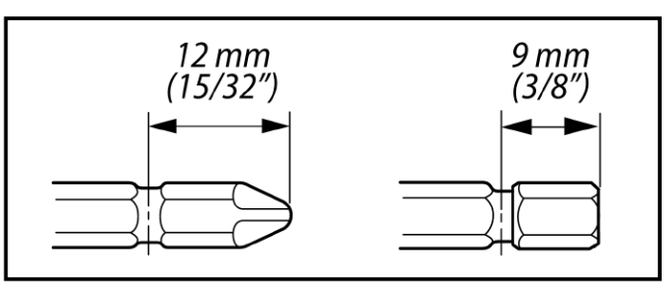

- Only use the bits shown in the figure above. Do not use any other sized driver/ socket bit.

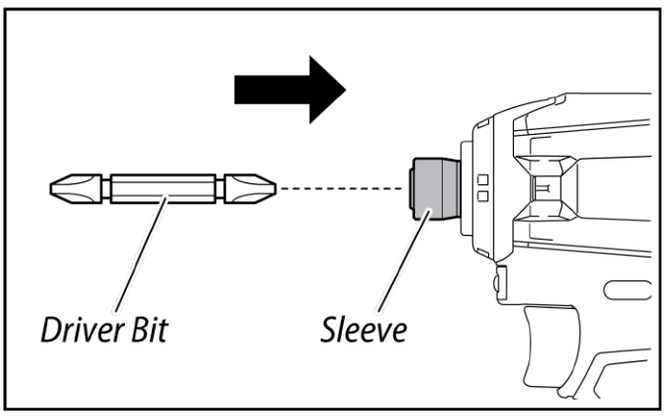

- To install the driver bit, insert it into the sleeve as far as it will go (above).

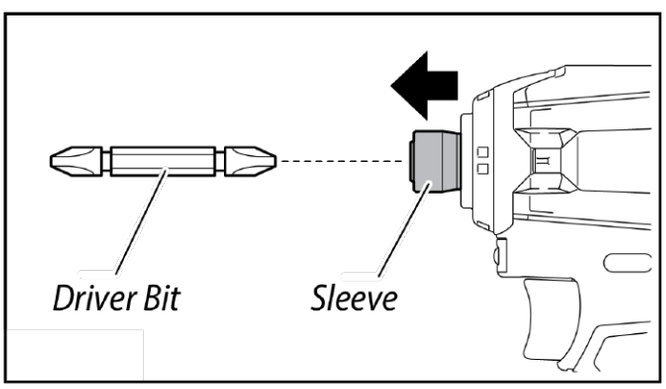

- To remove the driver bit, pull the sleeve in the direction of the arrow (above) and pull the driver bit out.

NOTE: If the driver bit is not inserted deep enough into the sleeve, the sleeve will not return to its original position and the driver bit will not be secured. In this case, try re-inserting the bit according to the instructions above.

NOTE: When it is difficult to insert the driver bit, pull the sleeve and insert it into the sleeve as far as it will go.

NOTE: After inserting the driver bit, make sure that it is firmly secured. If it is loose or comes out, do not use it!

OPERATION

Installing the Hook

CAUTION

When installing the hook, always secure it with the screw firmly. If not, the hook may come off from the tool and result in damage or personal injury.

- The hook is convenient for temporarily hanging the tool. This can be installed on either side of the tool.
- To install the hook, insert it into a groove in the tool housing on either side and then secure it with a screw.
- To remove, loosen the screw and then take it out.

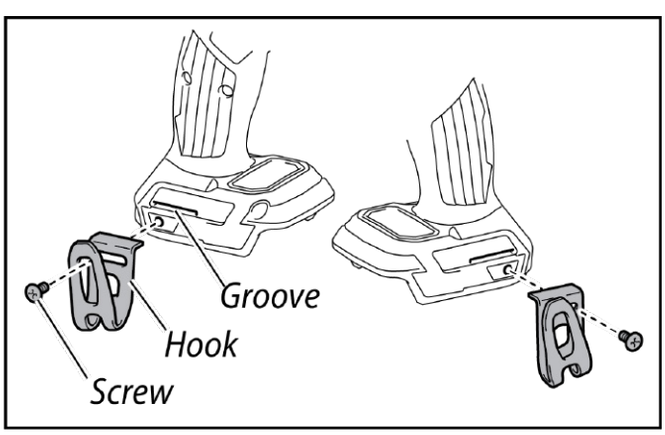

Usage

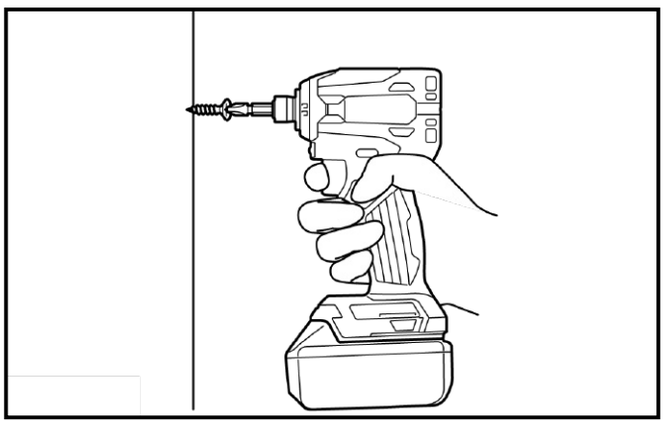

- Hold the tool firmly and place the point of the driver bit in the screw head. Apply forward pressure to the tool to the extent that the bit will not slip off the screw and turn the tool on to start operation.

NOTE: Use the proper bit for the head of the screw/bolt that you wish to use.

NOTE: When fastening an M8 or smaller screw, choose a proper impact force and carefully adjust pressure on the switch trigger so that the screw is not damaged.

NOTE: Hold the tool pointed straight at the screw.

NOTE: If the impact force is too strong or you tighten the screw for a time longer than shown in the figures on the following page, the screw or the point of the driver bit may be overstressed, stripped, damaged, etc. Before starting your job, always perform a test operation to determine the proper fastening time for your screw.

FASTENING TORQUE GUIDE

Proper Fastening Torque Guide

- The proper fastening torque may differ depending upon the kind or size of the screw/bolt, the material of the workpiece to be fastened, etc. The relation between fastening torque and fastening time is shown in the figures below.

Proper Fastening Torque for High Tensile Bolt

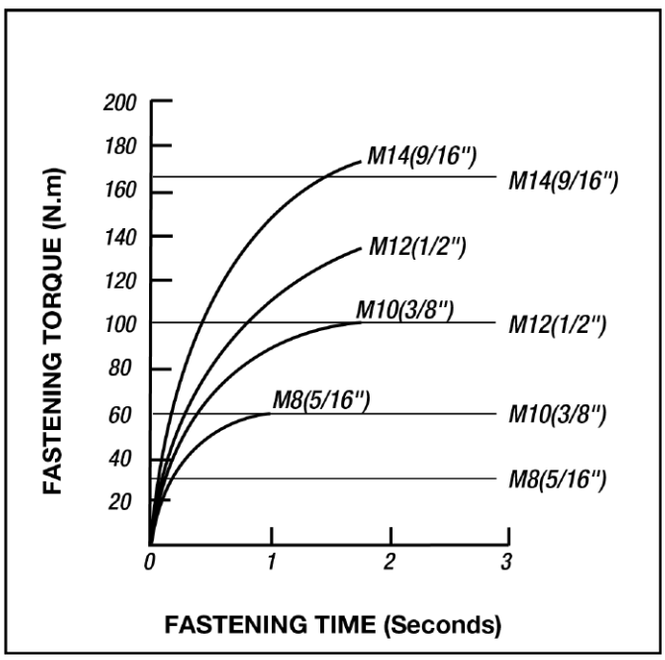

Proper Fastening Torque for Standard Bolt

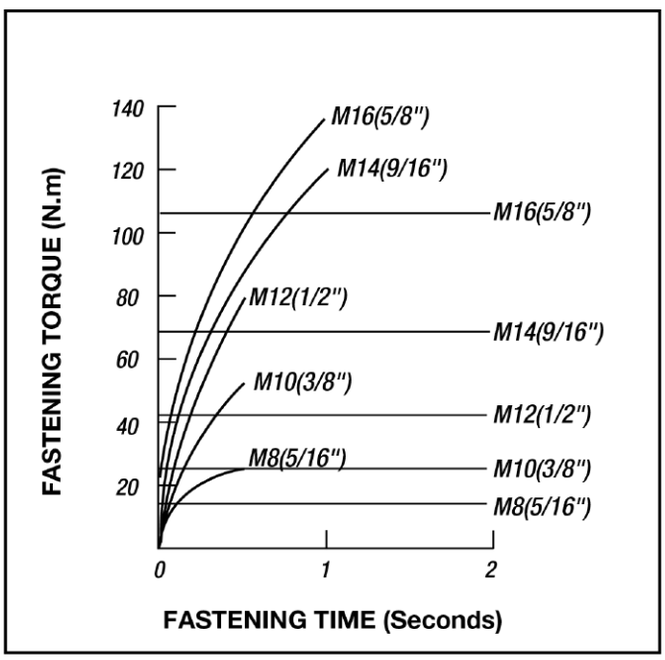

- The fastening torque is affected by a wide variety of factors including the following. After fastening, always check the torque with a torque wrench.

1. When the battery cartridge is discharged almost completely, voltage will drop and the fastening torque will be reduced.

2. Driver bit or socket bit: Failure to use the correct size driver bit or socket bit will cause a reduction in the fastening torque.

3. Bolt:
   - Even though the torque coefficient and the class of bolt are the same, the proper fastening torque will differ according to the diameter of bolt.
   - Even though the diameters of bolts are the same, the proper fastening torque will differ according to the torque coefficient, the class of bolt, and the bolt length.

4. The manner of holding the tool or the material of driving position to be fastened will affect the torque.

5. Operating the tool at low speed will cause a reduction in the fastening torque.

MAINTENANCE

- Before cleaning or performing any maintenance, you must ensure the tool is switched off and disconnected from the power supply.
- Compressed air is the most effective way to clean this tool. Always wear PPE safety goggles when cleaning tools with compressed air.
- Ventilation openings and switch levers must be kept clean. DO NOT attempt to clean by inserting pointed objects through openings.
- Do not use harsh chemicals or solvents when cleaning this tool.
- If you discover any damaged or broken parts, consult your local XHD distributor for replacements and advise.

Battery Disposal

- Batteries and electronics should not be disposed of in household garbage. Please return your old batteries to your local distributor for safe and environmentally friendly disposal.
- Together, we can care for the environment.

⚠ WARNING

Always be sure that the tool is switched off and the battery removed before attempting to perform any inspection or maintenance.

Environment & Disposal

- Packaging materials are raw materials and can be re-used. Separate the different packaging materials and take them to the appropriate waste disposal facility. More information can be obtained from your local authorities.
- Old machines do not belong in your household garbage! Dispose of old machines appropriately, we are all responsible for the environment.